SW22E

SPECIFICATIONS

RESISTANCE RANGE ---------- 50 OHMS TO 20K OHMS
RESISTANCE TOLERANCE ---------- ±3%
INDEPENDENT, LINEARITY----------±0.5%
POWER RATING ---------- 0.5 WATTS
ELECTRICAL NOISE----------100 OHM MAX.
ELECTRICAL ANGLE----------320°±5°
MECHANICAL ANGLE----------320°±5°
STOP STRENGTH ---------- 84 OZ.IN.MIN.
END RESISTANCE----------.2% OR 1 OHM MAXIMUM
RESOLUTION----------SEE CHART
INSULATION RESISTANCE ----------1000 MEGOHMS AT 1000 VDC MIN.
DIELECTRIC STRENGTH ----------1000 VAC
STARTING TORQUE----------0.8 OZ.IN.MAX.
TEMPERATURE COEFFICIENT----------SEE CHART
WEIGHT----------APPROX. 0.7 OZ.
OPERATING TEMPERATURE ---------- -55°C TO +105°C
ROTATIONAL LIFE ---------- 500,000 SHAFT REVOLUTIONS

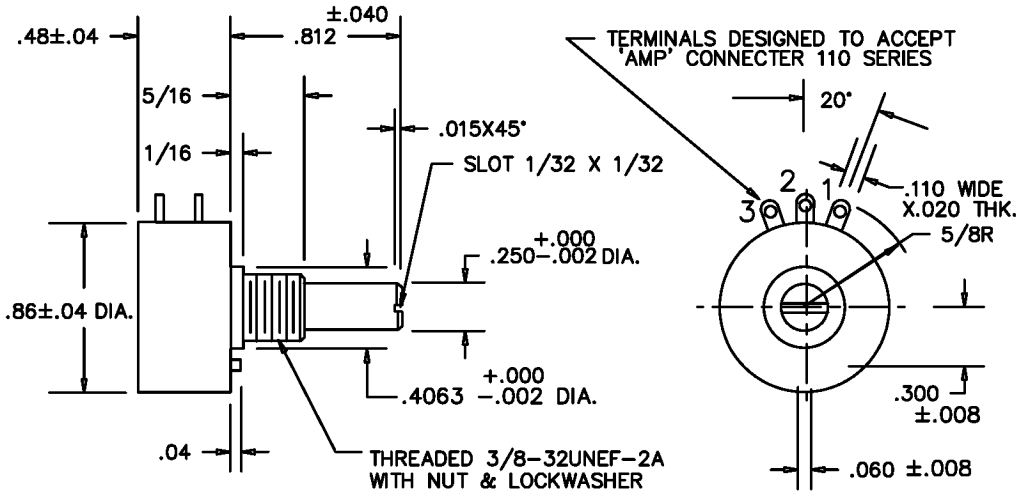

MATERIALS

HOUSING---------- HIGH TEMP. THERMO PLASTIC
TERMINALS---------- GOLD PLATED BRASS
BUSHING---------- BRASS
SHAFT ---------- STAINLESS STEEL
RESISTIVE ELEMENT---------- WIREWOUND

NON-STANDARDS AVAILABLE

MULTI-GANGED UP TO 6 SECTIONS
REAR SHAFT EXTENSION
FRONT SHAFT MODIFICATIONS
CENTER TAP
SPECIAL ELECTRICAL AND MECHANICAL ANGLES

SCHEMATIC

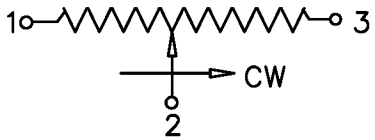

STANDARD RESISTANCE VALUES CHART

RESISTANCE (OHMS)	50	100	200	500	1K	2K	5K	10K	20K
RESOLUTION	.33	.27	.21	.22	.17	.13	.10	.08	.06
TEMPERATURE COEFFICIENT PPM/°C	80	80	80	20	20	20	20	20	20

Precision Sales Inc
www.precisionsales.com
eparts@precisionsales.com
610-359-1002